ICSE Board
Class IX Chemistry
Gold Series
Sample Paper-2 Solution

SECTION-I

Answer 1

(a)

(i) **Pure Substance:** A pure substance is a homogeneous material with a definite, invariable chemical composition and definite, invariable physical and chemical properties.
(ii) **Residue:** An insoluble component left behind after the process of filtration is called residue.
(iii) **Distillate:** The liquid component recovered after the process of distillation is called distillate.
(iv) **Distillation:** The process of simultaneous evaporation and condensation is called distillation.
(v) **Sedimentation:** The process of settling down of heavy insoluble particles under the influence of gravity is called sedimentation.

(b)

(i) $\mathbf{3}Cu + \mathbf{8}HNO_3 \rightarrow \mathbf{3}Cu(NO_3)_2 + \mathbf{4}H_2O + \mathbf{2}NO$
(ii) $\mathbf{2}FeSO_4 \rightarrow Fe_2O_3 + SO_2 + SO_3$
(iii) $Pb_3O_4 + \mathbf{8}HCl \rightarrow \mathbf{3}PbCl_2 + Cl_2 + \mathbf{4}H_2O$
(iv) $\mathbf{2}H_2S + SO_2 \rightarrow \mathbf{2}H_2O + \mathbf{3}S$
(v) $\mathbf{2}Ca(NO_3)_2 \rightarrow \mathbf{2}CaO + \mathbf{4}NO_2 + O_2$

(c)

(i) Sodium peroxide
(ii) Zinc hydroxide
(iii) Potassium bicarbonate
(iv) Potassium ferrocyanide
(v) Sodium hypochlorite

(d) Valency of metal 'M' is +2.

(i) MCl_2
(ii) $M(OH)_2$
(iii) MCO_3
(i) MO
(ii) $M(NO_3)_2$

(e)

(i) Sodium bromide
(ii) Zinc phosphide
(iii) Calcium oxalate
(iv) Ammonium sulphide
(v) Silver chloride

(f)

(i) Carbon monoxide
(ii) Hydrogen
(iii) Carbon
(iv) Ammonia
(v) Carbon

(g)

(i) In 1920, Indian physicist Satyendra Nath Bose made a study regarding the fifth state of matter. Based on his study, Albert Einstein predicted a fifth state of matter called as the Bose-Einstein Condensate.
The Bose-Einstein condensation or BEC is formed by cooling a gas of extremely low density, about one hundred thousandth of the density of normal air, to super low temperatures.

(ii) Steam is more dangerous than boiling water because, particles in steam (water vapour) at 373 K (100^0C) have more energy than water at the same temperature. This is because particles in steam have absorbed extra energy in the form of latent heat of vaporization. Thus, steam is more dangerous than water vapour.

(h)

(i) The Charl's law states that, "At constant pressure, the volume of a given mass of a dry gas increases or decreases by 1/273 of its original volume at 0^0C for each degree centigrade rise or fall in temperature.''

$$V \propto T \quad \text{(At constant pressure)}$$

At temperature T_1 (K) and Volume V_1 (cm^3)

$$V_1 \propto T_1 \text{ or } \frac{V_1}{T_1} = K = \text{Constant}$$

At temperature T_2 (K), Volume is V_2 (cm^3)

$$V_2 \propto T_2 \text{ or } \frac{V_2}{T_2} = K = \text{Constant}$$

$$\frac{V_1}{T_1} = \frac{V_2}{T_2} = \text{Constant}$$

(ii) On a hot day, due to increase in temperature the rate of evaporation of water is more.
Also the dryness of the air i.e. decrease in humidity of the air increases the rate of evaporation. Therefore, a desert cooler cools better on a hot dry day.

SECTION-II

Answer 2

(a)

(i) In solids, the molecules are closely packed (tightly bound) having minimum intermolecular space and maximum intermolecular force of attraction and hence they have definite shape.

(ii) Gases have maximum intermolecular space. Therefore, when two gases are brought in contact, they readily fill the intermolecular spaces and form a homogeneous mixture.

(iii) It is difficult to cook food on hills as the atmospheric pressure decreases with the increase in altitude. As the pressure decrease the boiling point of water also decrease and water boils at the temperature much below 100^oC and hence the heat provided by boiling water will not be sufficient to cook food. This is why it is difficult to cook food at hill stations.

(b)

(i) Ammonium hydroxide
(ii) Ammonium acetate
(iii) Soluble in hot water
(iv) Dilute acid
(v) Alkali or dilute acid.

(c) Latent heat of vaporization is the heat energy required to change 1 kg of a liquid to a gas at atmospheric pressure at its boiling point.

Answer 3

(a) Difference between burning and respiration is as follows:

Burning	Respiration
1. Oxygen is needed to combine with carbon and hydrogen present in carbon compound.	1. Oxygen is needed to combine with carbon and hydrogen present in food materials.
2. CO_2 + H_2O are formed with release of energy in the form of heat and light.	2. CO_2 and H_2O are formed with the release of energy in the form of heat alone.
3. It is a fast process.	3. It is a slow process.
4. It occurs at higher temperatures.	4. It occurs at body temperature through enzymes.
5. It is an artificial process.	5. It is a natural process.
6. Both heat and light energy are produced.	6. Only heat energy is produced.

(b)

(i) Chemical change
(ii) Physical change
(iii) Physical change
(iv) Physical change
(v) Chemical change

Answer 4

(a) On increasing pressure the solubility of a gas in a liquid increases whereas, on decreasing pressure the solubility of a gas in a liquid decreases. This shows the mass of a given volume of a gas which dissolves in liquid at constant temperature is directly proportional to the pressure on the surface of the liquid and thus in accordance with Henry's law.

(b)

(i) Increases
(ii) Increases
(iii) Decreases
(iv) Increases
(v) Increases

(c) When tea is poured in a saucer, it cools faster. Evaporation is a surface phenomenon. The particles of tea on the surface absorb heat for vaporization from the remaining particles of tea and evaporates. The tea thus loses heat and cools faster.

Answer 5

(a)

(i) The physical and the chemical properties of the elements are the periodic functions of their atomic numbers.
(ii) Group 17
(iii) Atomic number
(iv) Periods
(v) Alkali

(b) Rutherford's scattering Experiment

- Rutherford selected a gold foil as he wanted a very thin layer.
- The gold foil used by Rutherford was 0.004 millimeters in thickness. That is, the foil was about 1000 atoms thick.
- In his experiment, fast moving Alpha particles (α-particles) were made to fall on a thin gold foil.
- Alpha particles are helium ions with +2 charge. Their atomic mass is 4 u, hence a high velocity beam of α-particles has a lot of energy.
- These particles were studied by means of flashes of light they produced on striking a zinc sulphide screen.
- The α-particles are much heavier than the sub-atomic particles present in the gold atoms.
- Hence, He expected the α-particles to pass through the gold foil with little deflections and strike the fluorescent screen.

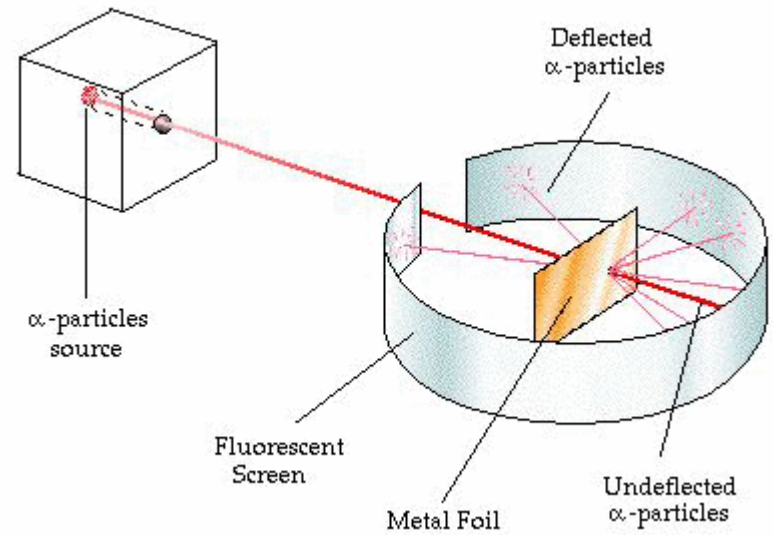

Rutherford's α-Particle Scattering Experiment

But the observations he made were quite unexpected.

Observations made by Rutherford:

1. Rutherford observed that most of the α-particles passed straight through the gold foil.
2. Some α-particles were deflected by the foil through small angles while some were deflected through very large angles.
3. One out of every 12000 particles were deflected through 180° showing a full rebound.

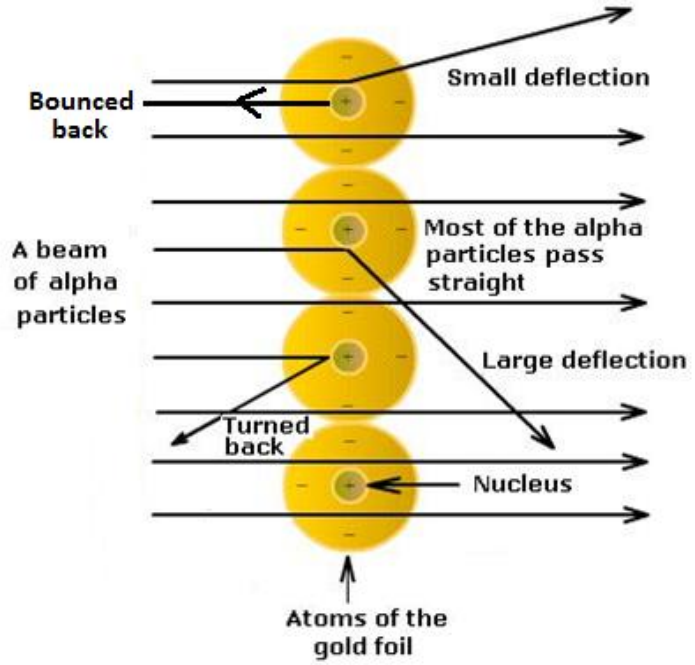

Deflection of α-Particles from the Gold foil

Rutherford said that, "*This result was almost as incredible as if you fire a 15-inch shell at a piece of tissue paper and it comes back and hits you".*

Explanation of the results of Rutherford's Gold foil experiment

- Rutherford postulated that the atom must contain large empty spaces as most of the α-particles passed through it without getting deflected.
- The α-particles, being positively charged, could only be deflected by positive charges present inside the atom.
- As very few α-particles were deflected, Rutherford concluded that the positively charged particles in an atom must be concentrated in a very small space.
- An even smaller fraction of α-particles were deflected through an angle of 180^0.
- Thus, Rutherford came to the conclusion that all the positive charge of the atom and most of the mass of the atom is concentrated in a very small volume within the atom.

- Rutherford named this small space inside the atom as the "nucleus of the atom" or the "atomic nucleus". When the thickness of the gold foil was doubled, the number of α-particles reflecting back was also doubled.
- On the basis of these observations, Rutherford calculated that the atomic nucleus is 10^5 times smaller than the total area of the atom.
- The radius of the atom is 10^{-8} centimeter while the radius of the nucleus is 10^{-13} centimeter.
- Thus, we can say that the atom is relatively hollow with a heavy nucleus at its centre. The electrons arranged around the nucleus possess negligible mass.
- Based on his observations, he formulated his '**Theory of atom**'.

Answer 6

(a)

(i) $2H_2 + O_2 \rightarrow 2H_2O$

Hydrogen Oxygen Water

(ii) $H_2 + S \rightarrow H_2S$

Hydrogen Sulphur Hydrogen sulphide

(b)

(i) Calcium nitrate

Symbol Ca NO_3

Valency: Ca^{2+} NO_3^{1-}

1- 2+

Formula: **$Ca(NO_3)_2$**

(ii) Sodium chloride

Symbol Na Cl

Valency: Na^{2+} Cl^{2-}

2- 2+

Formula: Na_2Cl_2 = **NaCl**

(iii) Magnesium sulphate

Symbol Mg SO_4

Valency: Mg^{2+} SO_4^{2-}

2- 2+

Formula: $Mg_2(SO_4)_2$ = **$MgSO_4$**

(iv) Ammonium bicarbonate

Symbol NH_4 HCO_3

Valency: NH_4^{+1} HCO_3^{1-}

1- 1+

Formula: **NH_4HCO_3**

(v) Aluminium oxide

Symbol Al O

Valency: Al^{3+} O^{2-}

2- 3+

Formula: **Al_2O_3**

(c) Valence electron for-

(i) K = 1
(ii) Ca = 2
(iii) S = 6
(iv) N = 5
(v) Ar = 8
(vi) O = 6

Answer 7

(a)

Let, $V_1 = x$ $V_2 = ?$

$P_1 = 1$ atm. $P_2 = 2$ atm.

T_1 $T_2 = 3\ T_1$

$$\frac{P_1V_1}{T_1} = \frac{P_2V_2}{T_2}$$

$$\frac{1 \times x}{T_1} = \frac{2 \times V_2}{3T_1}$$

$$V_2 = \frac{3T_1\ x}{T_1 \times 2}$$

$V_2 = 1\frac{1}{2}$ times original volume V_1

(b)

Pressure of dry hydrogen
P = 750 – 14 = 736 mrn
V = 50 cm^3

t = 17°C = 17 + 273 = 290 K

P_1 = 760 mm

V = ?

$T_1 = 0^oC = 273$ K

Using gas equation,

$$\frac{PV}{t} = \frac{P_1V_1}{t_1}$$

$$\frac{736 \times 50}{290} = \frac{760 \times V_1}{273}$$

$$\therefore V_1 = \frac{736 \times 50 \times 273}{290 \times 760}$$

$= 45.58 \text{ cm}^3$

Let us say (By rounding up),

$= 45.6 \text{ cm}^3$

$\therefore V_1 = 45.6 \text{ cm}^3$

(c)

The three variables for gas laws are:
1. Volume, V

2. Pressure, P

3. Temperature, T

These three are called as the **'Standard variables'**.
S.I. unit of volume is cubic meter (m^3).

S.I. unit of pressure is Pascal (Pa).

S.I. unit of temperature is Kelvin (K) or degree Celsius (^0C).