ICSE Board
Class X Physics
Silver Series
Sample Paper – 1 Solution

Section I

Answer 1

(a) In a prism, the refraction of light takes place at the two slant surfaces. Dispersion of white light occurs at the first surface of the prism, where its constituent colours deviate through different angles. At the second surface, these split colours again refract and get further separated. However, in a rectangular glass block, refraction of light occurs at the two parallel surfaces. At the first surface, although the light splits into its constituent colours on the first refraction, the split colours merge and form a single beam of white light at the second surface.

(b) The angle of deviation will be maximum for violet light and minimum for red light.

(c)

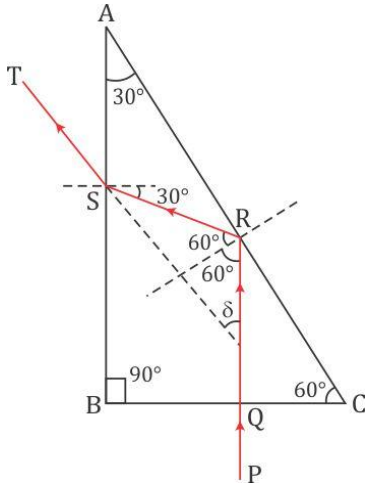

(d)

i. Ultra violet radiation affects photographic plates, but infra-red radiation does not.
ii. Ultra violet radiation is used for detecting the purity of gems, eggs, ghee etc., whereas infrared radiation is used for photography in fog and as signals during war.

(e) When a ray of light is refracted by a prism, the angle between the original path of the incident ray and the path of the emergent ray produced backwards is the angle of deviation.
It is the angle by which a ray of light gets deviated from its path.

Answer 2

(a)

i. According to Newton's second law of motion, F = ma; for constant mass, the force acting is directly proportional to the acceleration produced.
Hence, when force F_1 acts on mass m, greater acceleration will be produced than that of force F_2.

ii. The ratio is

$$F_1 = ma_1$$

$$F_2 = ma_2$$

$$\frac{F_1}{F_2} = \frac{a_1}{a_2}$$

(b)

i. Staircase

ii. In a single movable pulley system, the efficiency is not 100% because (1) the string is not inextensible and mass-less. (2) Frictional force between the pulley wheel and the string used is not negligible.

(c) Given, mass of wasp, m = 20 g = 0.02 kg
v = 50 cm/s = 0.5 m/s, g = 10 m/s^2
We know that, P = F.v = (mg) v = 0.02 × 10 × 0.5 = 0.1 watt
Power generated in the wings = 0.1 watt

(d)

i. Work done could be zero if
   1. Force and displacement are perpendicular to each other.
   2. Displacement is zero.

ii. When a body is whirled around in a circle with uniform speed. Example: Stone tied to the end of a string. Here, the force is directed towards the centre and is normal to the direction of motion. Hence, work done (W = F.s cos90° = 0) is zero.

(e)

i. Acceleration is maximum at the centre position.

ii. Kinetic energy is maximum at the centre position.

Answer 3

(a)

i. Magnetic field can be detected by placing a magnetic compass in the vicinity of the current-carrying wire.

ii. The electric and magnetic field planes are perpendicular to each other.

(b)

i. Electric motor

ii. The turning effect can be increased by increasing the intensity of the magnetic field.

(c)

i. A motor converts electrical energy to mechanical energy, and an AC generator converts mechanical energy to electrical energy.

ii. In a motor, the carbon brushes touching the split rings are connected to the terminals of the battery. In an AC generator, the carbon brushes press the slip rings and the other ends of brushes act as terminals of a dynamo for the external circuit. Polarity of the carbon brushes does not change.

(d) For wire 1,

Let length = 1, Area of cross-section = a, Resistance = R_1

Then for wire 2,

Let length = ½, Area of cross-section = 2a, Resistance = R_2

Since both wires are made of the same material, their resistivity will be the same (*say* ρ).

We know that, $R = \rho\frac{l}{a}$

$$\therefore \frac{R_1}{R_2} = \frac{\left(\rho \times \frac{1}{a}\right)}{\left(\rho \times \frac{1}{2(2a)}\right)} = \frac{4}{1}$$

(e) Emf of a cell depends on

i. Material of electrodes

ii. Electrolyte used in the cell

Answer 4

(a) Conditions necessary for echo formation:

1. Minimum distance between the source of sound and its reflector should be 17 m.
2. Reflected sound should reach the person at least 0.1 second after the original sound is heard.

(b)

i. (3) Amplitude
ii. (1) loudness

(c) Both ice cubes and ice cold water are at the same temperature, but ice cubes cool a drink effectively because each gram of an ice cube will absorb 336 J of additional heat from the drink in the form of latent heat, while the same mass of ice cold water at the same temperature will not absorb that much amount of heat. So, ice cubes cool a drink effectively.

(d)

i. Current will be greater when the resistors are connected in parallel.
ii. The rate of conversion of electrical energy to heat energy will be greater in the parallel connection.

(e)

i. Q (charge) in the electric field is similar to m (mass) in the gravitational field.
ii. V (potential) in the electric field is similar to gh in the gravitational field.

Section II

Answer 5

(a)

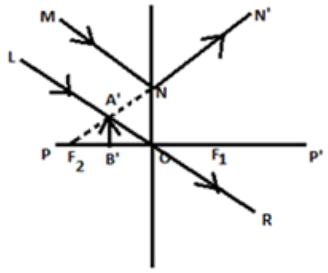

i. Optical centre 'O' is marked in the diagram above.
ii. Ray LR drawn is parallel to ray MN and passes through the optical centre as shown in the diagram above.
iii. It is a concave lens. Its focuses F_1 and F_2 are marked in the diagram above.
iv. Position of image A′B′ as shown in the diagram is on the same side of the lens as the object.

(b) Factors affecting the deviation of light through a prism:
i. Angle of the prism
ii. Refractive index of the material of the prism

(c) **<u>Snell's Law:</u>** The second law of refraction is also called Snell's law. The ratio of the sine of the angle of incidence in the first medium to the sine of the angle of refraction in the second medium is a constant for a given pair of media and for a given wavelength of light.

n = sin i / sin r

Here, n is a constant known as the refractive index of the second medium with respect to the first medium.

(d) The bottom of a swimming pool appears raised due to the refraction of light. Consider the tiles at the bottom of the pool in the figure. Two rays of light BM and BP emerging from the bottom after refraction bend away from the normal in the direction MN and PQ. These rays reach the observer's eye and they appear to come from Point A, which is nearer to the surface of water than the bottom B.

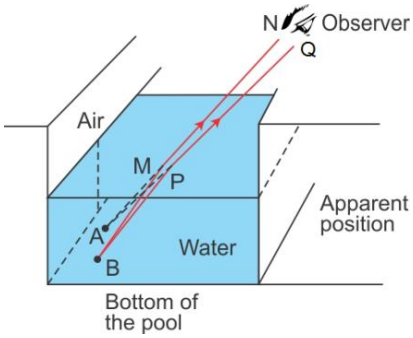

Answer 6

(a) Given, m = 261 kg, s = 2.3 m, t = 4 s

i. Weight lifted by Didyk = mg = 261 × 10 = 2610 N

ii. Work done by Didyk, W = F.s = 2610 N × 2.3 m = 6003 J

iii. Power, $P = \frac{w}{t} = \frac{6003}{4} = 1500.75\,W$

(b) According to the question:

Effort, E = 6 kgf = 6 kg × 10 ms^{-2} = 60 N

Load, L = 4.8 kgf = 4.8 kg × 10 ms^{-2} = 48 N

We know that, E = T = L + f, here f is the force of friction.

∴ f = E – L = 60 N – 48 N = 12 N

So, the force of friction, f = 12 N

Mechanical advantage, $MA = \frac{L}{E} = \frac{48}{60} = 0.80$

Efficiency, $\eta = \frac{M.A.}{V.R.}$

For a single fixed pulley, VR = 1

$\therefore \eta = \frac{0.80}{1} = 0.8 = 80\%$

Efficiency = 80%

(c)

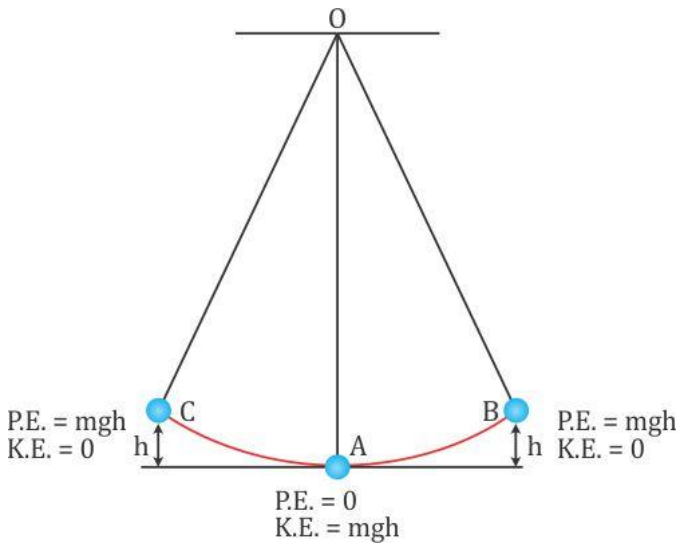

The figure shows a simple pendulum suspended from a rigid support O. Its resting position is A. When it is displaced to one side and then released, it swings from one side to another, reaching equal distance and equal height on either side. Neglecting the friction between the bob and the surrounding air, the motion of the pendulum can be explained by applying the law of conservation of energy:

As the bob swings from A to B, the kinetic energy changes to potential energy, and at B, its total mechanical energy is the potential energy, and it momentarily comes to rest here. As it swings back from B to A, the PE decreases and KE increases and the kinetic energy is $\frac{1}{2}mv^2$. It can be proved using equations of motion that $\frac{1}{2}mv^2 = gh$. Hence, total energy remains the same at A and B. At A, it has total mechanical energy in the form of kinetic energy.

Again, when it swings from A to C, KE decreases and PE increases, becoming maximum at C. From C to A, PE again changes to KE.

At an intermediate position, the bob has both KE and PE, and the sum of both energies remains constant throughout the swing.

Answer 7

(a)

i. 'An electric bulb rated 200 V, 100 W' means that if the bulb is lighted on a 200 V supply, it consumes 100 W electrical power, or 100 J of electrical energy is converted to heat and light in 1 second.

ii. Resistance of a bulb marked 200 V, 100 W:
$R = (200)^2 / 100 = 400\ \Omega$
Resistance of a bulb marked 200 V, 50 W:
$R = (200)^2 / 50 = 800\ \Omega$
Coil of a bulb rated 200 V, 50 W has higher resistance.

iii. Energy used E = Power × Time
E = (100/1000) × 10 × 10 = 10 kWh

iv. Cost of energy used = 10 kWh × Rs 1.60 = Rs 16.

(b) Let mass of water at 100°C = m
Mass of water of 10°C = 5 kg
Let 'c' be the specific heat capacity of water.
Final temperature of water bath = 30°C
According to the principle of a mixture,
Heat lost by water at 100°C = Heat gained by water at 10°C
$\therefore m\,c\,(100 - 30)°C = (5)\,(c)\,(30 - 10)°C$

$$\therefore m = \frac{5 \times 20}{70} = 1.4\,\text{kg}$$

Assumption: No heat is lost to the surroundings.

(c)

i. Ultrasonic waves are used in SONAR.

ii. Electromagnetic waves are used in RADAR.

Answer 8

(a) Nuclear fusion is the process in which two light nuclei combine to form a heavy nucleus, which results in the release of a large amount of energy. Nuclear fusion is exploited to make thermo-nuclear weapons. A lot of effort is made to utilise nuclear fusion for future energy production using a fusion reactor.

(b)

Any physical changes (such as pressure and temperature) or chemical changes (such as excessive heating, chemical reaction, action of strong and magnetic field) do not alter the activity (or rate of disintegration) of the radioactive substance. This clearly shows that radioactivity cannot be due to orbital electrons which could easily be affected by such changes. Radioactivity is thus a property of the nucleus, or it can be said that radioactivity is a nuclear phenomenon.

(c)

Nuclear fission	**Nuclear fusion**
A heavy nucleus splits into two equal light fragments	Light nuclei combine to form a heavy nucleus
Can occur at ordinary temperature and pressure	Requires very high temperature and pressure
For one fission reaction, 190 MeV of energy is released	For one fusion reaction, 24.7 MeV energy is released

(d) Complete the following fusion reactions:

a) ${}^{3}_{2}He + {}^{3}_{2}H \longrightarrow {}^{4}_{2}He + {}^{2}_{1}H$ + energy

b) ${}^{2}_{1}H + {}^{2}_{1}H \longrightarrow {}^{3}_{2}He + {}^{1}_{0}n$ + energy

c) ${}^{235}_{92}U + {}^{1}_{0}n \longrightarrow {}^{141}_{56}\mathrm{Ba} + {}^{92}_{36}Kr + 3{}^{1}_{0}n$ + energy

Answer 9

(a) Sound heard after reflection from a rigid obstacle (such as a cliff, a hillside, a wall of a building, edge of a forest etc.) is called an echo. A resonant vibration is a special case of forced vibration wherein the frequency of sources and the resonant body are either equal or integral multiples of each other, which results in a loud sound.

(b)

i. Free vibration: When we strike the keys of a piano, various strings are set in vibration at their natural frequencies.

ii. Vibrations produced in the diaphragm of a gramophone sound box with the frequencies corresponding to the tones conveyed from the record are forced vibrations.

(c) For ice:

Mass, m_1 = 65 g

Temperature t_1 = 0°C

Let L be the latent heat of fusion of ice.

For water:

Mass, m_2 = 150 g

Temperature t_2 = 50°C

Let c be the specific heat capacity of water (= 4.2 J g^{-1} K^{-1}).

Given, final temperature of mixture is t = 10°C

Here,

Heat gained by ice = Heat lost by water

$m_1L + m_1c\,(t - t_1) = m_2c\,(t_2 - t)$

65 L + 65 (4.2) (10) = 150 (4.2) (40)

65 L + 2730 = 25200

Or, 65 L = 22470

Or, L = 346 J/g

(d)

i. The specific heat capacity of a substance is the amount of heat energy required to raise the temperature of a unit mass of that substance through 1°C (or 1 K).
Its SI unit is 'joule per kilogram per kelvin (Jkg^{-1} K^{-1}).

ii. The thermal capacity of a body is the amount of heat energy required to raise its temperature by 1°C or 1 K.
Its SI unit is 'joule per Kelvin' (J°K^{-1}).

Answer 10

(a) A labelled circuit diagram for the verification of Ohm's law is as follows:

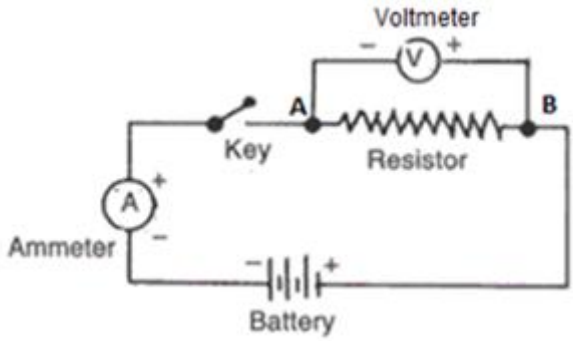

The law is verified for part AB of the circuit.

(b)

i. When resistors are joined in series, the current remains the same.
ii. When resistors are joined in parallel, the voltage remains the same.

(c)

i. Electric meter: Every house is provided with an electric meter to record its consumption of electrical energy.
ii. Distribution box: From the distribution box, wires go to different parts of the house. It acts as a link between the main meter and the different parts of the house.
iii. Cartridge type of fuse: A cartridge type fuse of proper rating is used in appliances such as TV, geyser and refrigerator to protect them from short circuiting. In this type of fuse, the ends of fuse wire are soldered to metal caps and are covered with a glass case.
iv. Three-pin plug: A three-pin plug connects the appliance to the electric supply. It consists of three metallic pins in an ebonite case which are connected to the live, earth and neutral wires.