CBSE Board
Class X Mathematics
Term II
Sample Paper - 3

Time: 3 hrs **Total Marks: 90**

General Instructions:

1. **All** questions are **compulsory**.
2. The question paper consists of **34** questions divided into **four sections** A, B, C, and D. **Section A** comprises of **8** questions of 1 mark each, **Section B** comprises of **6** questions of 2 marks each, **Section C** comprises of **10** questions of 3 marks each and **Section D** comprises of **10** questions of 4 marks each.
3. Question numbers **1 to 8** in **Section A** are multiple choice questions where you are to select **one** correct option out of the given four.
4. Use of calculator is **not** permitted.

Section A
(Questions 1 to 8 carry 1 mark each)

1. The next term of the given series $\sqrt{2}+\sqrt{8}+\sqrt{18}+\sqrt{32}+.....$ would be

A. $\sqrt{50}$
B. $\sqrt{70}$
C. $\sqrt{80}$
D. $\sqrt{90}$

2. To draw a pair of tangents to a circle which are inclined to each other at an angle of $35°$, it is required to draw tangents at the end points of those two radii of the circle, the angle between which is

A. $105°$
B. $70°$
C. $140°$
D. $145°$

3. The ratio of the length of a pole and its shadow is $\sqrt{3}:1$. The angle of elevation of the Sun is

A. $30°$
B. $45°$
C. 90°
D. 60°

4. If a die is thrown once the probability of getting a prime number is

A. $\frac{1}{2}$

B. $\frac{1}{3}$

C. $\frac{1}{4}$

D. $\frac{1}{5}$

5. The positive root of $\sqrt{3x^2 + 6} = 9$ is:

A. 3
B. 4
C. 5
D. 7

6. The ordinate of a point is twice its abscissa. If its distance from the point (4, 3) is $\sqrt{10}$, then the co-ordinates of the point are

A. (1, 2) or (3, 5)
B. (1, 2) or (3, 6)
C. (2, 1) or (6, 3)
D. (2, 1) or (3, 6)

7. The radius of a cylindrical tank is 28 m. If its capacity is equal to that of a rectangular tank of size 28 m x 16 m x 11 m then, its depth is

A. 2 m
B. 3 m
C. 4 m
D. 5 m

8. The radius (in cm) of the largest right circular cone that can be cut out from a cube having an edge of 4.2 cm is

A. 4.2 cm
B. 2.1 cm
C. 1.05 cm
D. 8.4 cm

Section B
(Questions 9 to 14 carry 2 marks each)

9. If the 3rd and 6th terms of an A.P. are 7 and 13 respectively, find the 10th term.

10. In the given figure, XP and XQ are tangents from X to the circle. R is a point on the circle. Prove that XA + AR = XB + BR.

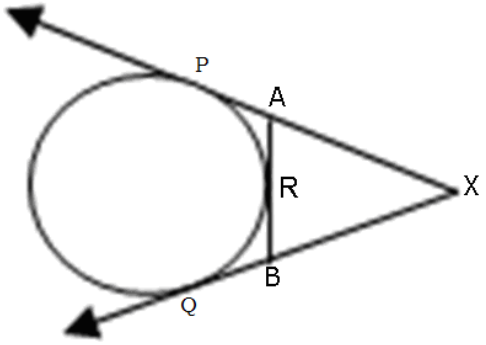

11. Determine the set of values of p for which the quadratic equation $px^2 + 6x + 1 = 0$ has real roots.

12. Find points on the x-axis, which are at a distance of 5 units from the point A(5, −3).

13. Show that the points (a, b + c), (b, c + a) and (c, a + b) are collinear.

14. A bicycle wheel makes 5000 revolutions in moving 11 km. Find the diameter of the wheel.

Section C
(Questions 15 to 24 carry 3 marks each)

15. Solve : $\frac{1}{a}+\frac{1}{b}+\frac{1}{x}=\frac{1}{a+b+x}$

16. Find the area of the quadrilateral ABCD whose vertices are A(1, 1), B(7, −3), C(12, 2) and D(7, 21) respectively.

17. A boy standing on a horizontal plane finds a bird flying at a distance of 100 m from him at an elevation of 30°. A girl standing on the roof of a 20 m high building finds the angle of elevation of the same bird to be 45°. The boy and the girl are on opposite sides of the bird. Find the distance of the bird from the girl.

18. If the point (x, y) is equidistant from the points (a + b, b − a) and (a − b, a + b), then prove that bx = ay.

19. The sum of four consecutive numbers in an A.P. is 32 and the ratio of the product of the first and the last terms to the product of the two middle terms is 7 : 15. Find the numbers.

20. Construct a triangle similar to ΔABC in which AB = 4.6 cm, BC = 5.1 cm, $m\angle A = 60^o$ with scale factor 4 : 5.

21. One card is drawn from a pack of 52 cards, each of which is equally likely to be drawn. Find the probability that the card drawn is:

i. either red or king
ii. a red face card
iii. '10' of a black suit

22. The cost of fencing a circular field at the rate of Rs. 24 per metre is Rs. 5280. The field is to be ploughed at the rate of Rs. 0.50 per m^2. Find the cost of ploughing the field. $\left(\text{Take } \pi=\frac{22}{7}\right)$

23. The given figure shows a trapezium ABCD where AD || BC. A semi-circle with AB as diameter is drawn inside the trapezium.

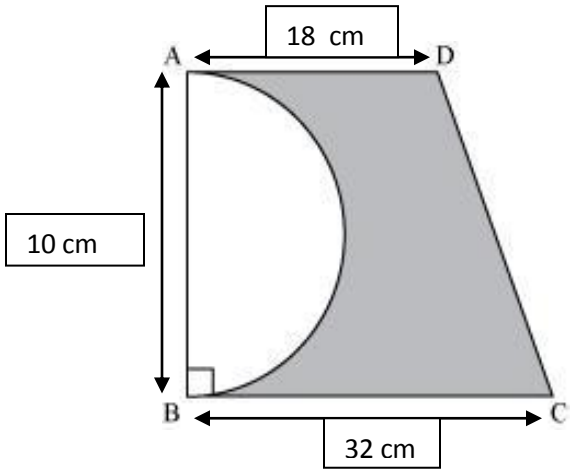

24. Find the A.P. whose fourth term is 9 and the sum of its sixth and thirteenth terms is 40.

Section D
(Questions 25 to 34 carry 4 marks each)

25. The difference between the square of two natural numbers is 45. The square of the smaller number is four times the larger number. Find the two numbers.

26. In the given figure, find the area of the shaded region. $\left(\text{Take } \pi = \frac{22}{7}\right)$

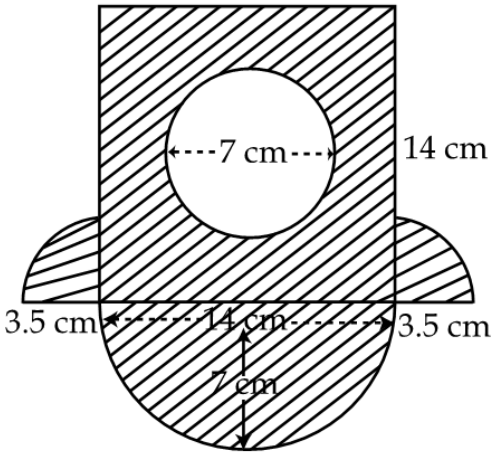

27. A card is drawn at random from a well shuffled deck of playing cards. Find the probability that the card drawn is

i. a king or a jack
ii. a non–ace card
iii. a red card
iv. neither a king nor a queen

28. If $x_1, x_2, x_3 \ldots\ldots x_n$ are in A.P. such that $xi > 0$ for every i, then prove that $\frac{n-1}{\sqrt{x_1+\sqrt{x_n}}} - \frac{1}{\sqrt{x_{n-1}}+\sqrt{x_n}} = \frac{1}{\sqrt{x_1+\sqrt{x_2}}} + \frac{1}{\sqrt{x_2+\sqrt{x_3}}} + \ldots\ldots\ldots\ldots\ldots\ldots + \frac{1}{\sqrt{x_{n-2}}+\sqrt{x_{n-1}}}$

29. From a window of a house in a street, h metres above the ground, the angles of elevation and depression of the top and the foot of another house on the opposite side of the street are α and β respectively. Show that the height of the opposite house is h(1+ tanα.cotβ) metres.

30. A tent is of the shape of a right circular cylinder upto a height of 3 metres and conical above it. The total height of the tent is 13.5 metres above the ground. Calculate the cost of painting the inner side of the tent at the rate of Rs. 2 per square metre, if the radius of the base is 14 metres.

31. Two tangent segments PA and PB are drawn to a circle with centre O such that m∠APB = 120°. Prove that OP = 2AP.

32. In the given figure, AC = BD = 7 cm and AB = CD = 1.75 cm. Semicircles are drawn as shown in the figure. Find the area of the shaded region. $\left[\text{Take } \pi = \frac{22}{7}\right]$

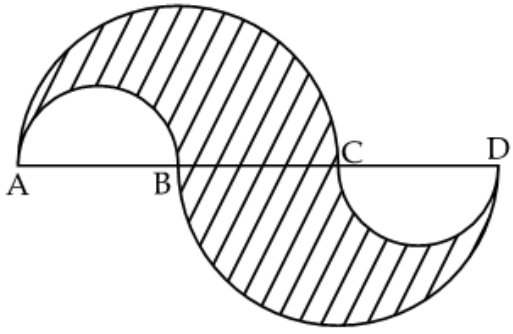

33. Prove that the tangent at any point of a circle is perpendicular to the radius through the point of contact.

34. Hari, a cold milk-seller has set up a cold milk shop. As shown in figure, he has two types of glasses, both in the shape of a frustum of a cone whose radii of the ends are 6 cm and 3 cm, to serve the customers. The height of the glass is 10 cm.

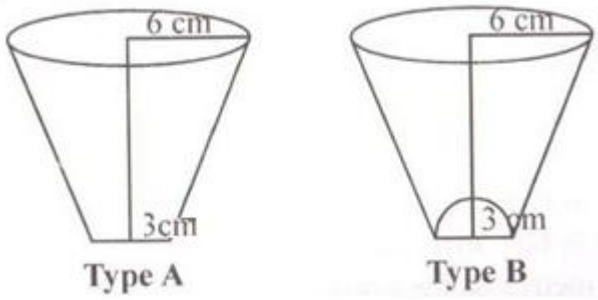

He decided to serve the customers in A type of glasses.

i. Find the volume of glass of type A.
ii. Which glass has the less capacity?
iii. By choosing a glass of type A, which value is depicted by cold milk-seller Hari?